AT R121-10

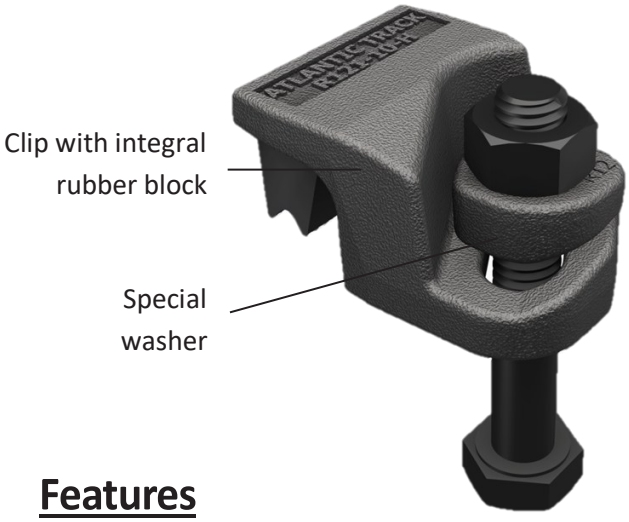

Clip Specifications		
Bolt Grade	**8.8**	**10.9**
Max Side Load Capacity (kN)	21	30
Bolt Torque (Nm)	85	100
Horizontal Rail Adjustment (mm)	10	

Product Description

The R121-10 adjustable crane rail clip from Atlantic Track is specifically engineered to secure light rails in challenging environments. Its compact design enables compatibility with cranes equipped with guide rollers.

With its trusted **'double wedge'** mechanism, this clip ensures **automatic locking** and tightening when subjected to a load, effectively securing the rail laterally. Additionally, a specially designed vulcanized rubber nose applies a controlled force to the rail for enhanced stability.

Features

- The distinctive washer design developed ensures proper engagement of the clip, washer, and bolt with the rail, **preventing loosening**.
- The washer was specifically designed to facilitate **easy and intuitive installation** while ensuring compatibility with **M12 bolts.**
- Drain hole to **prevent build-up** of contaminants and standing water.

Dimensional data

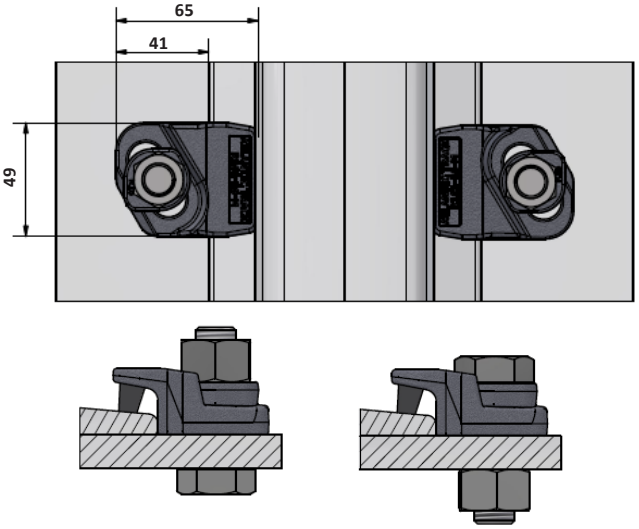

The hexagon headed fixing bolt can be inserted from above or below the supporting structure.

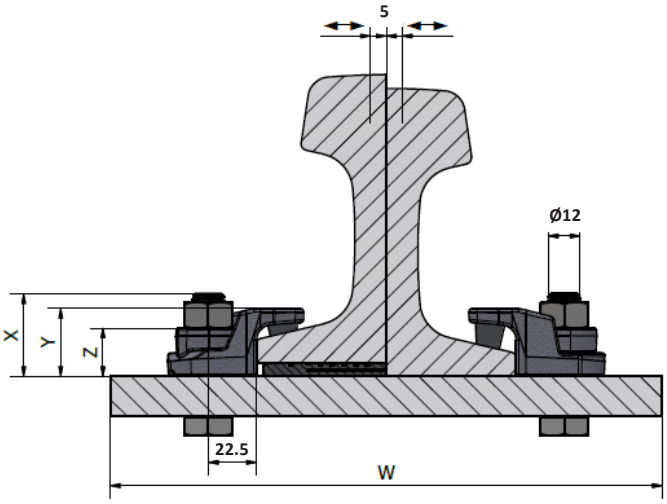

Ref N.	X (mm)	Y (mm)	Z (mm)	Weight (Kg)
R121-10-H	35	31	21	0.24
Minimum Plate Width (W) = Rail width + 90mm				

The clip is designed to be compatible with a wide variety of rails, encompassing those that offer an 8mm to 20mm gap between the top of rail foot and the clip nose, which is the point of contact. Atlantic Track provides appropriately sized noses to ensure a proper fit.

Please contact Atlantic Track International for the full range of possible rails.

www.atlantictrack.com

crdinternational@atlantictrack.com

Atlantic Track reserves the right to discontinue or change specifications or design at any time without prior notice and without incurring any obligation whatsoever.