AT X1-16

Patent Pending N# 2306136.9

Clip Specifications	
Bolt Grade	8.8
Max Side Load Capacity (kN)	120
Bolt Torque (Nm)	200
Horizontal Rail Adjustment (mm)	15

1. Clip Cap with integral rubber nose

2. Welded Clip Base

Product Description

The X1-16 adjustable crane rail clip from Atlantic Track is specifically engineered to secure heavy rails on narrow girders, even in the most demanding applications. It can withstand a formidable lateral force of 120kN.

Its **low-profile** design enables compatibility with cranes equipped with guide rollers. The well-established **'double wedge'** design ensures self-locking and self-tightening when under load, providing lateral fixation for the rail. Simultaneously, a specially formulated vulcanized rubber nose applies a controlled force to the rail for enhanced stability.

Features

- **Standard M16 or 5/8" bolts** in combination with flange nuts act together to lock the two parts.
- The clip has a proven self-tightening mechanism to **prevent loosening** over time.
- Drain hole to prevent build-up of contaminants and standing water.
- Atlantic Track's special stepped surface design serves two purposes: it creates an **anti-rotation lock** and **enhances the side load capacity**.
- Welded to the rails support, this clip requires no access from below.

Dimensional data

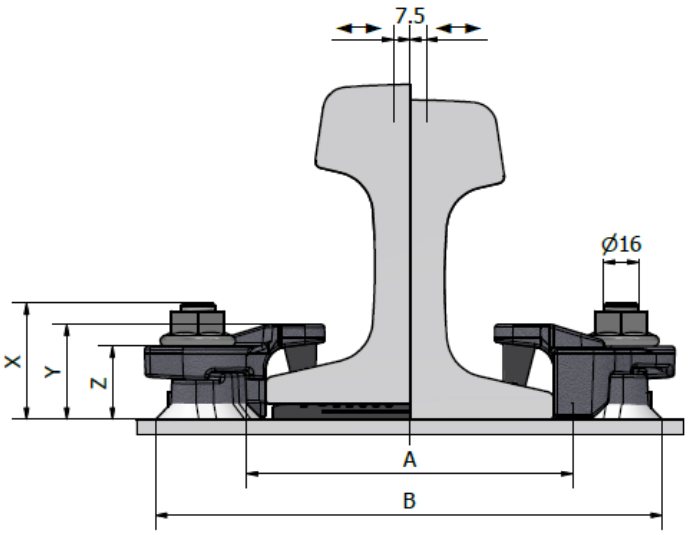

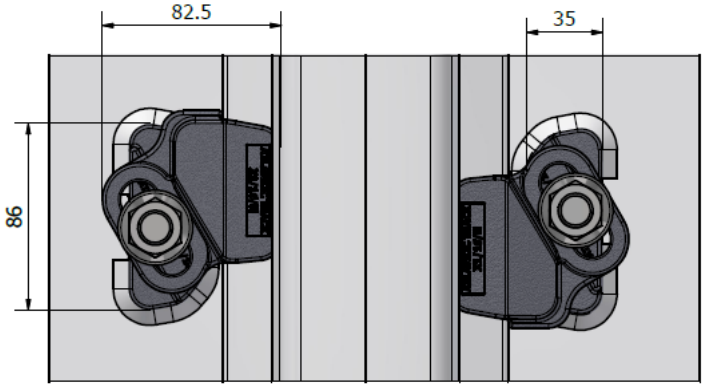

Distance Between Bases (A) = Rail width + 16mm
Minimum Plate Width (B) = Rail width + 100mm

Clip Name	X (mm)	Y (mm)	Z (mm)	Weight (Kg)
X1-16-L	53	28	33	0.71
X1-16-M	53	36	33	0.77
X1-16-H	53	43	33	0.81

Atlantic Track reserves the right to discontinue or change specifications or design at any time without prior notice and without incurring any obligation whatsoever.

AT X1-16

Patent Pending N# 2306136.9

In-situ system Compatibility

In certain instances, the semi-refurbishment of existing systems may only necessitate the replacement of clip caps. Atlantic Track's unique stepped design offers numerous advantages while ensuring compatibility with a wide range of existing systems available in the market.

For more information regarding clip cap compatibility with your existing system, please contact Atlantic Track technical team.

Rail Compatibility

We offer a range of clip height options that cater to different rail sizes and mounting types, including both pad-mounted and hard-mounted rails. The vulcanized rubber block size can be adjusted to precisely align the clip with the rail and exert a controlled vertical force on it. If you need help in choosing the appropriate clip height variant, please reach out to Atlantic

Please contact Atlantic Track International for the full range of possible rails. Atlantic Track may change or improve their products and also alter specifications without notice.

Installation Instructions

Weld all round the clip base with a 5mm throat thickness fillet weld, using low hydrogen electrodes. Recommended electrodes AWS E7018 or E7028. The clip base is made from weldable grade steel.

***For rail without pad -** Weld along the front edge must be omitted, as illustrated.

Bolt Size – M16 (Grade 8.8) or 5/8" Imperial, 40mm long, should be used accompanied with a flange nut to secure the clip cap and base.

Bolts should be **torqued to 200 N.m**

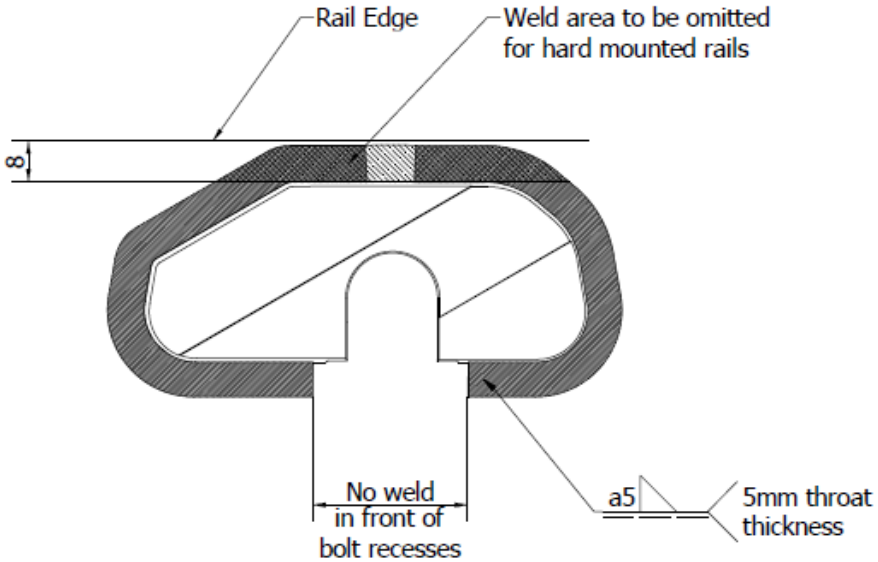

Please contact Atlantic Track for full installation instructions.

Atlantic Track reserves the right to discontinue or change specifications or design at any time without prior notice and without incurring any obligation whatsoever.